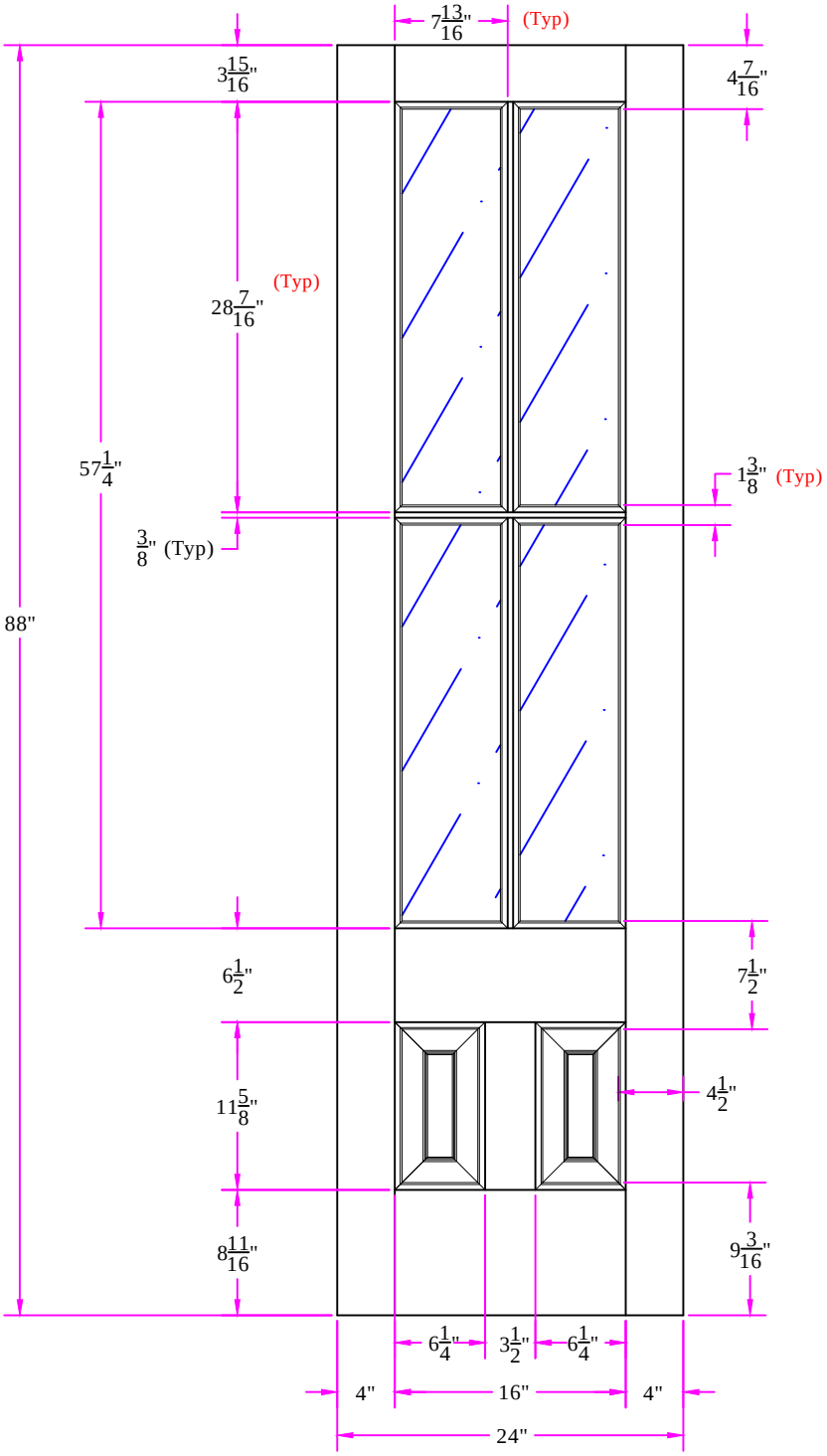


THIS DRAWING AND THE INFORMATION CONTAINED HEREIN IS THE PROPRIETARY TO SIMPSON DOOR COMPANY AND SHALL NOT BE REPRODUCED, COPIED OR DISCLOSED IN WHOLE OR PART, OR USED FOR MANUFACTURE OR FOR ANY OTHER PURPOSE WITHOUT THE WRITTEN PERMISSION OF SIMPSON DOOR COMPANY.

Revisions

| Rev. # | Description | Date | by Whom |
|---|---|---|---|
| | | | |
| | | | |
| | | | |
| | | | |

TITLE 7524 2/0 x 7/4
Customer Layout

DRAWING NO. D-7524-200-704-0700

| LAYOUT | SCALE | BORE PATTERN # |
|---|---|---|
| 00 | NTS | 7093 |

| DRAWN BY: | DATE |
|---|---|
| Z. Saiz | 05/03/2013 |

Simpson®