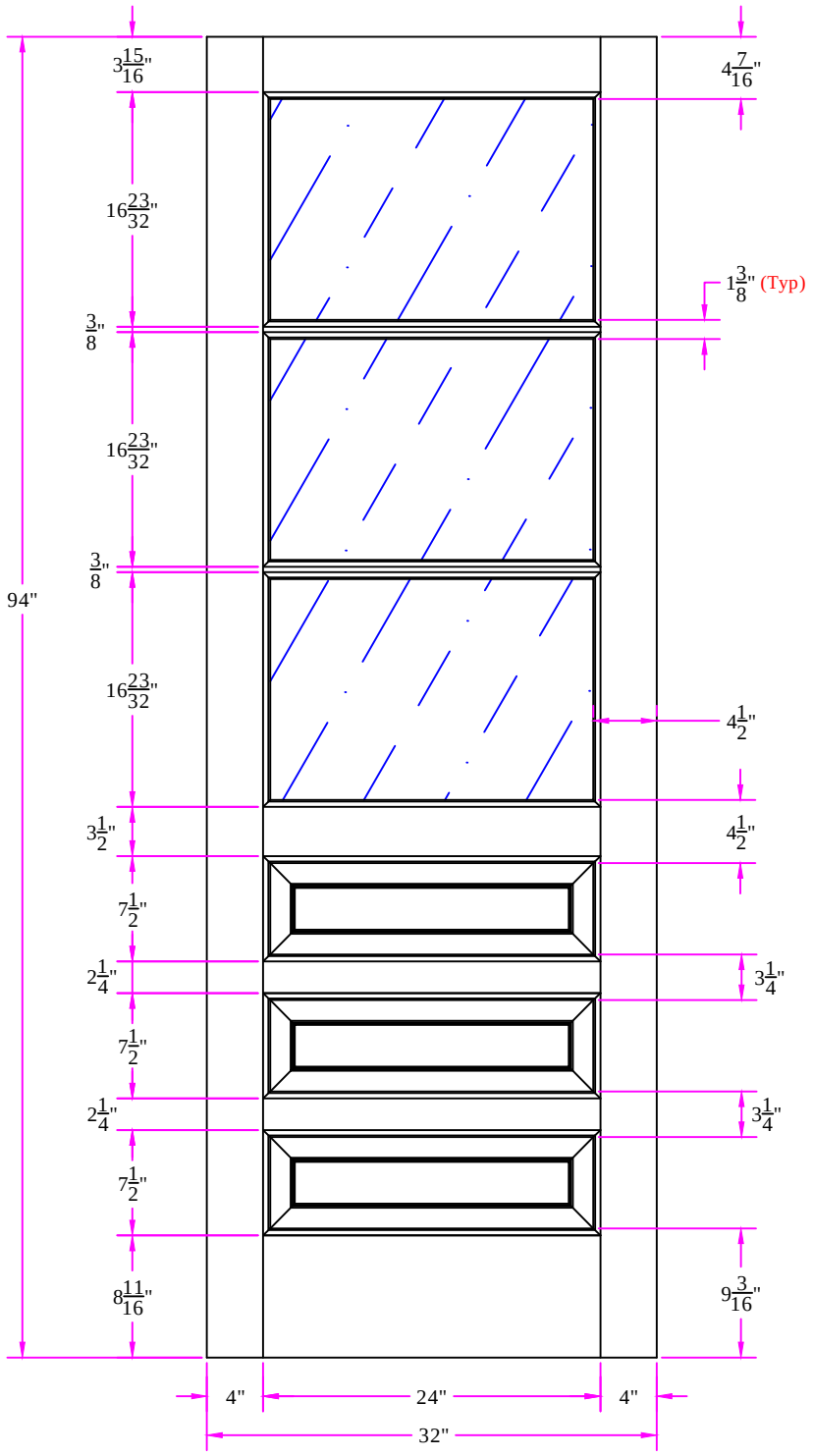

THIS DRAWING AND THE INFORMATION CONTAINED HEREIN IS THE PROPRIETARY TO SIMPSON DOOR COMPANY AND SHALL NOT BE REPRODUCED, COPIED OR DISCLOSED IN WHOLE OR PART, OR USED FOR MANUFACTURE OR FOR ANY OTHER PURPOSE WITHOUT THE WRITTEN PERMISSION OF SIMPSON DOOR COMPANY.

Revisions

Rev. #	Description	Date	by Whom

TITLE 7318 2/8 x 7/10 Customer Layout

DRAWING NO. D-7318-208-710-0700

LAYOUT	SCALE	BORE PATTERN #
00	NTS	0000

DRAWN BY:	DATE
Z. Saiz	06/06/2013

Simpson®