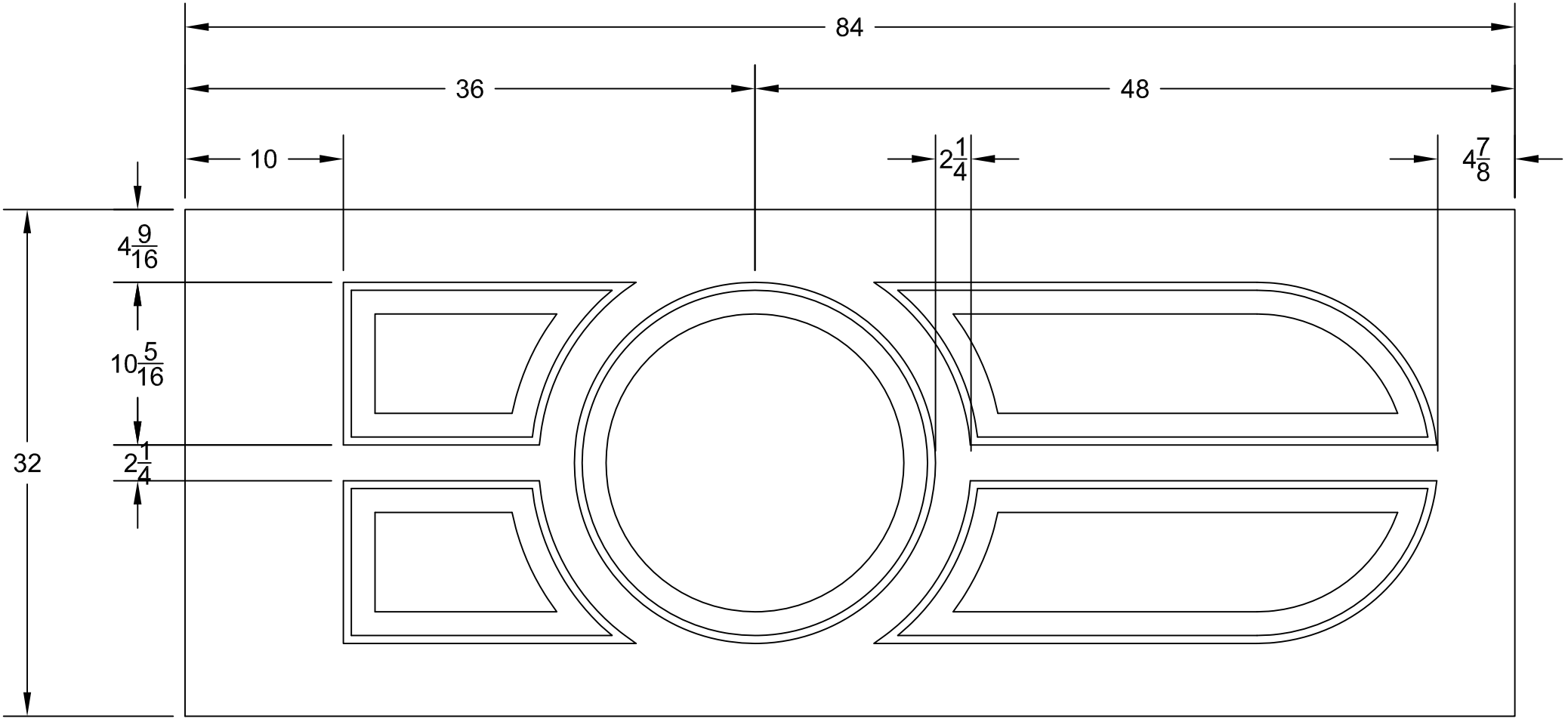
84
36
48
10
$2\frac{1}{4}$
$4\frac{7}{8}$
$4\frac{9}{16}$
$10\frac{5}{16}$
$2\frac{1}{4}$
32