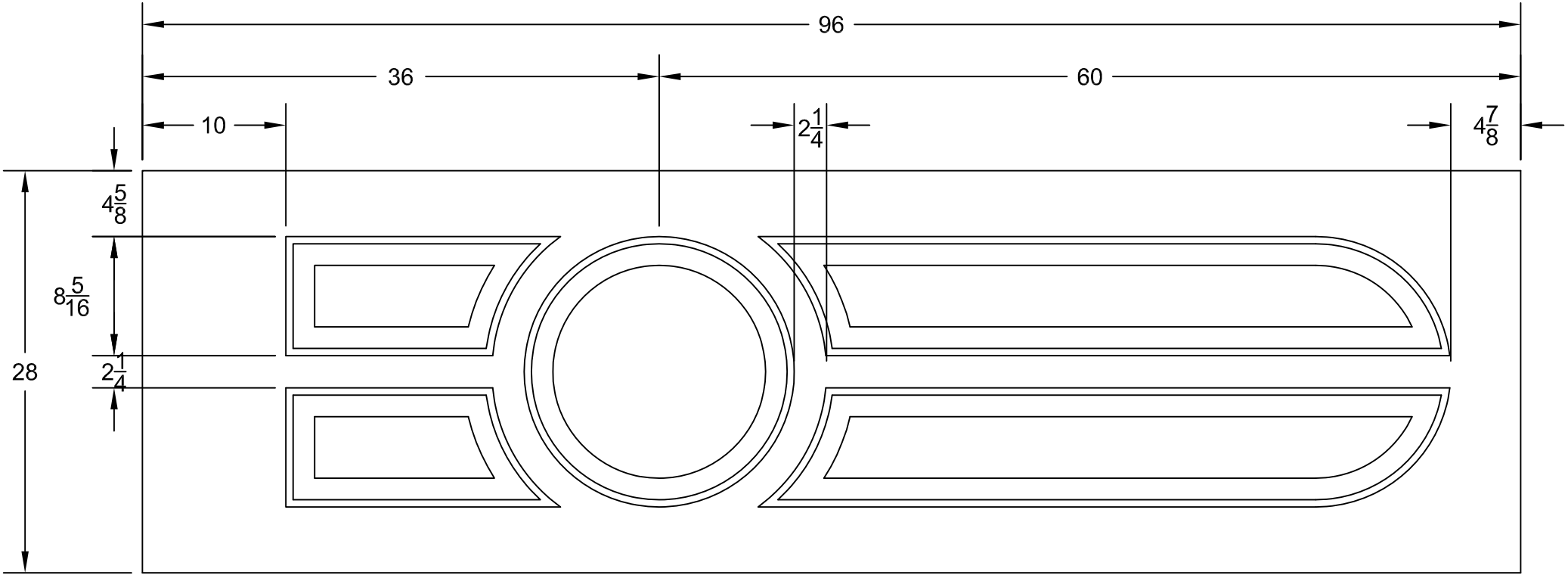
96
36
60
10
$2\frac{1}{4}$
$4\frac{7}{8}$
$4\frac{5}{8}$
$8\frac{5}{16}$
$2\frac{1}{4}$
28