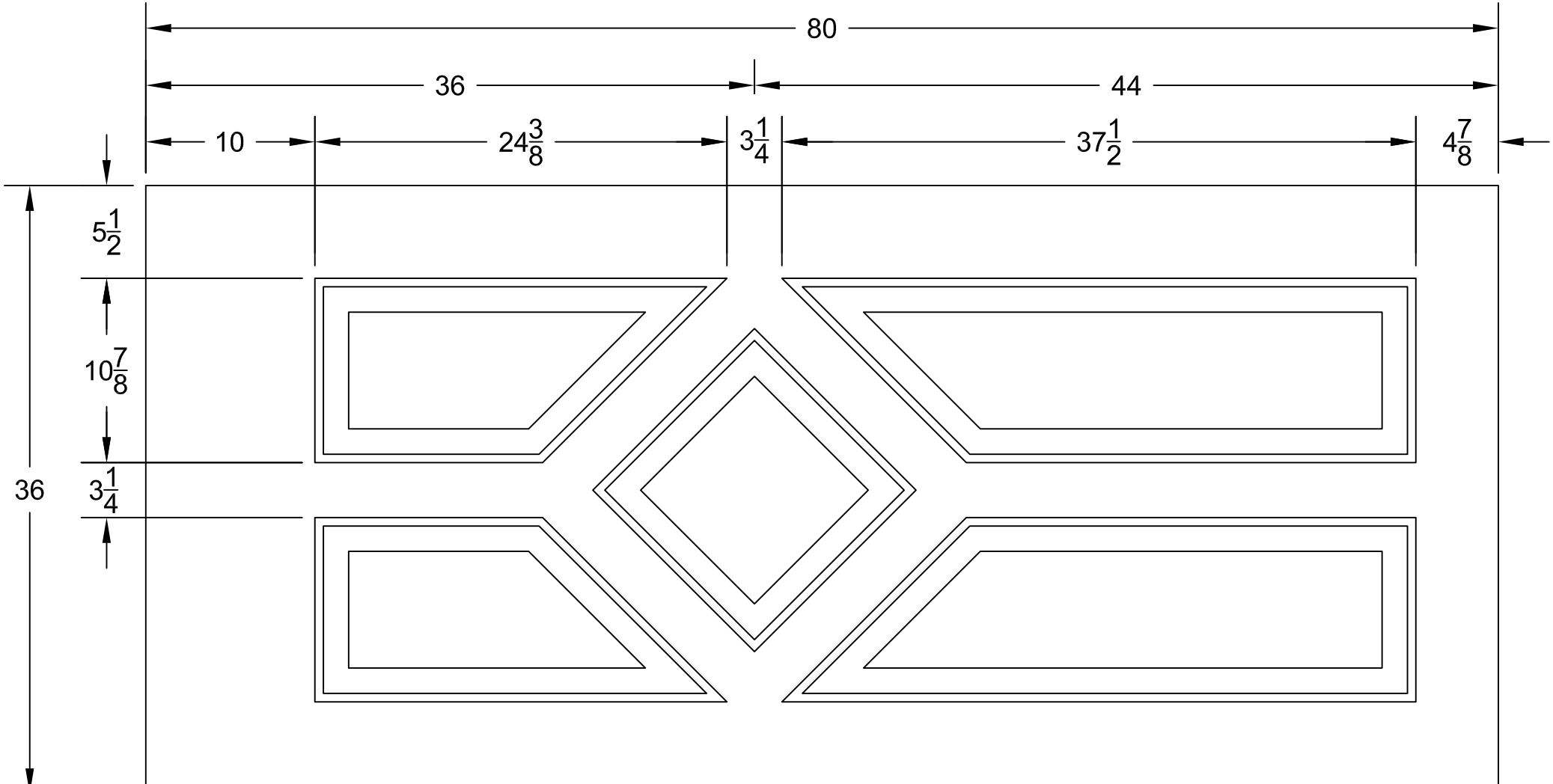
80
36
44
10
$24\frac{3}{8}$
$3\frac{1}{4}$
$37\frac{1}{2}$
$4\frac{7}{8}$
$5\frac{1}{2}$
$10\frac{7}{8}$
$3\frac{1}{4}$
36