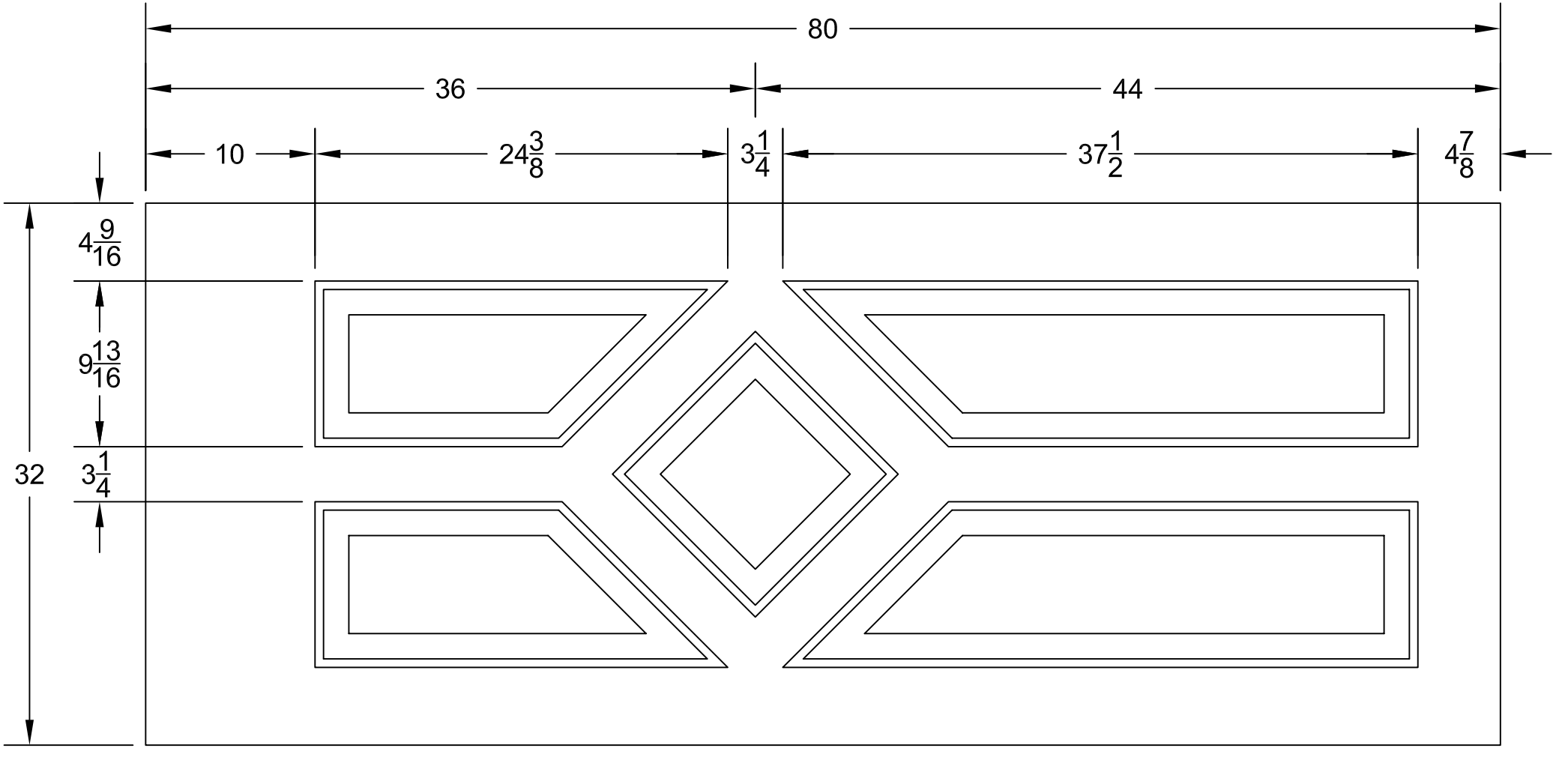
80
36
44
10
$24\frac{3}{8}$
$3\frac{1}{4}$
$37\frac{1}{2}$
$4\frac{7}{8}$
$4\frac{9}{16}$
$9\frac{13}{16}$
32
$3\frac{1}{4}$