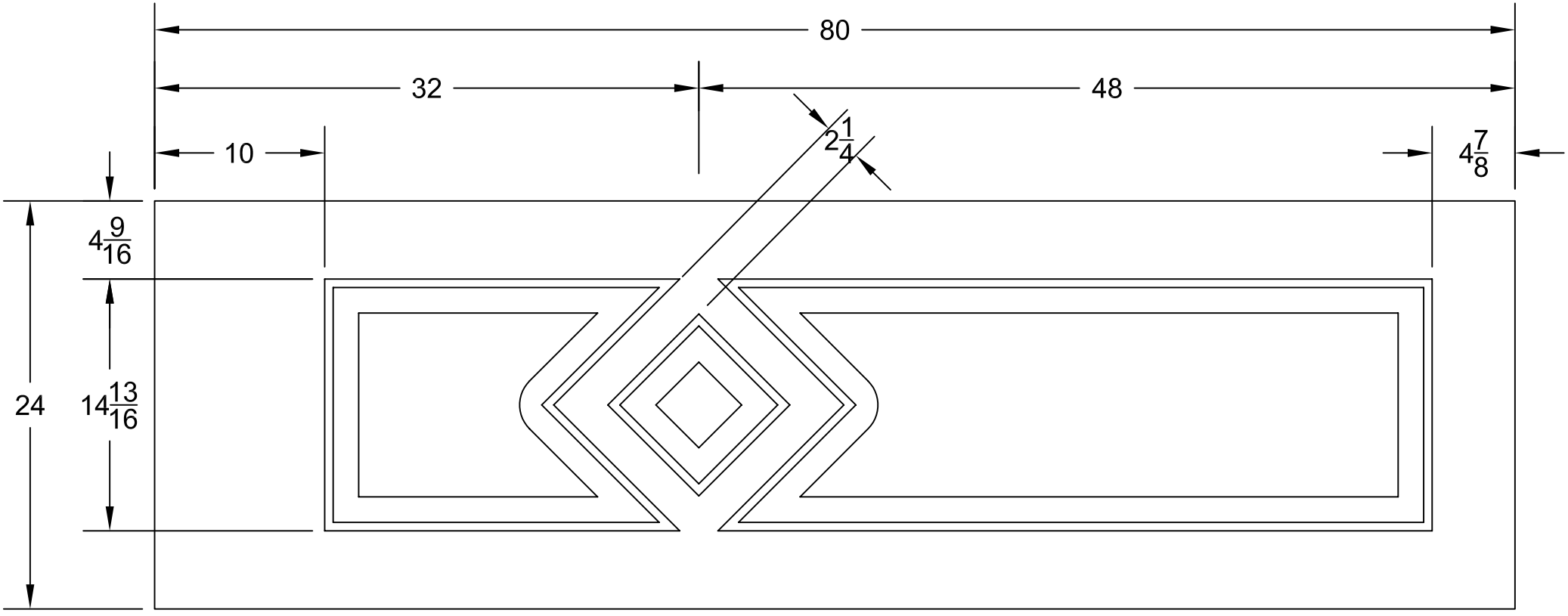
80
32
48
10
$2\frac{1}{4}$
$4\frac{7}{8}$
$4\frac{9}{16}$
24
$14\frac{13}{16}$